MP3 CD Soundmachine

AZ1816

all versions

Service
Service
Service

Service Manual

COMPACT disc DIGITAL AUDIO ReWritable

COMPACT disc DIGITAL AUDIO Recordable

MP3-CD PLAYBACK MP3

CONTENTS

Circuit diagram - CD part
Key part
Power amp part
USB part
Tuner part
Tuner buffer part

PCB Layout diagram - top view
bottom view

Service parts list

CLASS 1
LASER PRODUCT

© Copyright 2006 Philips Consumer Electronics B.V. Eindhoven, The Netherlands
All rights reserved. No part of this publication may be reproduced, stored in a retrieval system or transmitted, in any form or by any means, electronic, mechanical, photocopying, or otherwise without the prior permission of Philips.

Published by LX 0701 Service Audio Subject to modification

GB 3141 785 31520

Version 1.0

PHILIPS

Downloaded Free from http://www.free-service-manuals.com

CD part

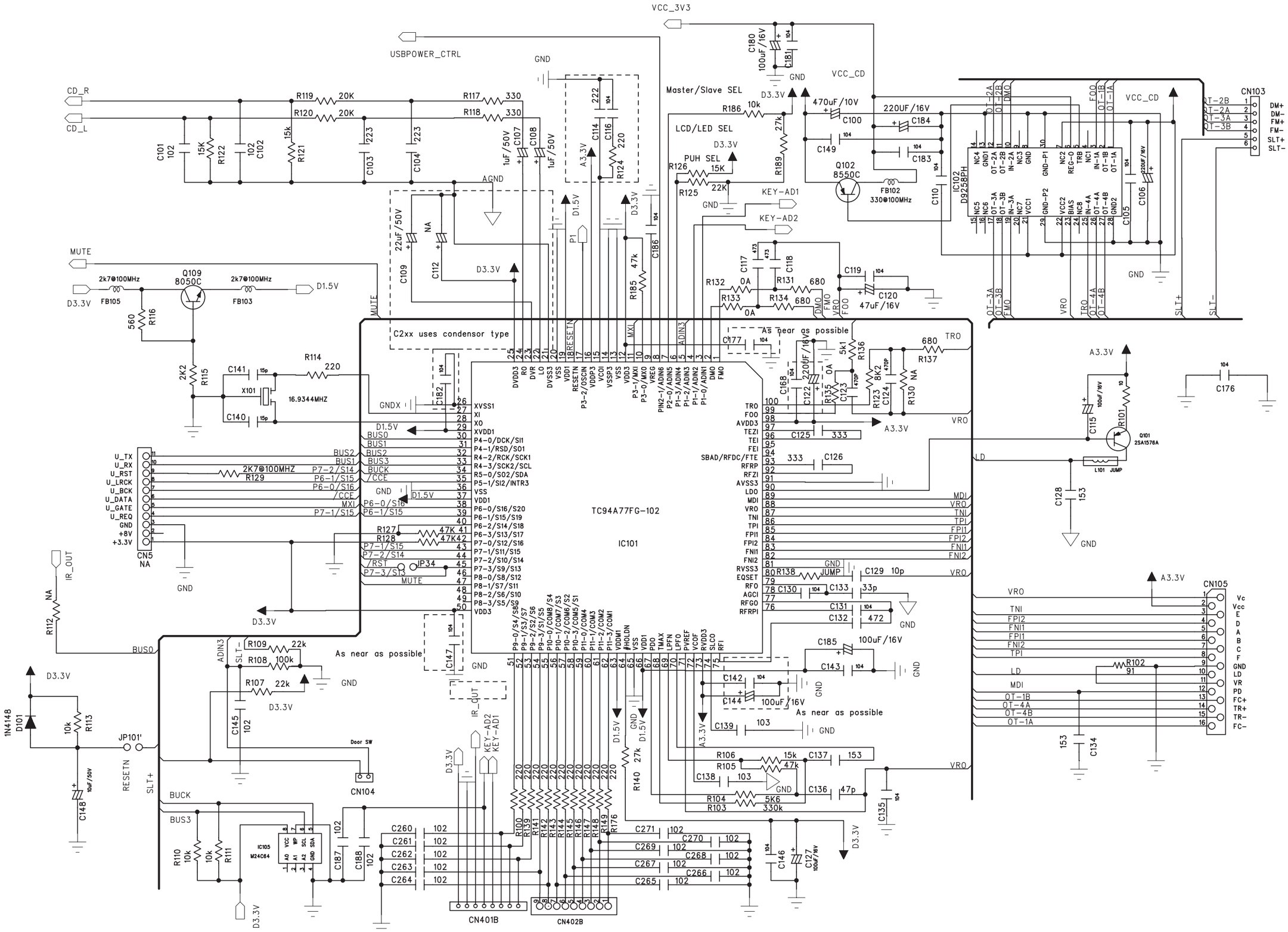

Downloaded Free from http://www.free-service-manuals.com

KEY part

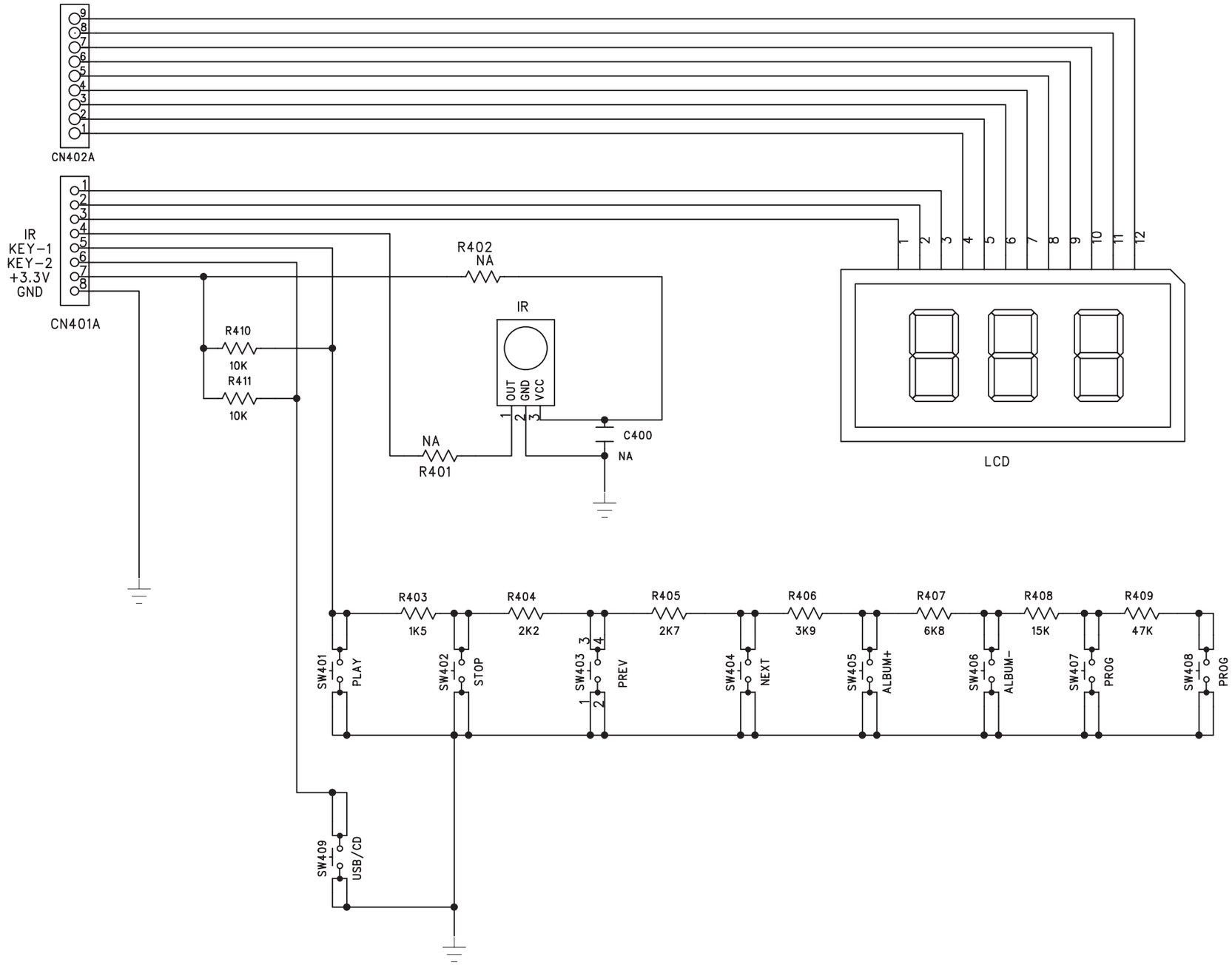

Downloaded Free from http://www.free-service-manuals.com

POWER AMP part

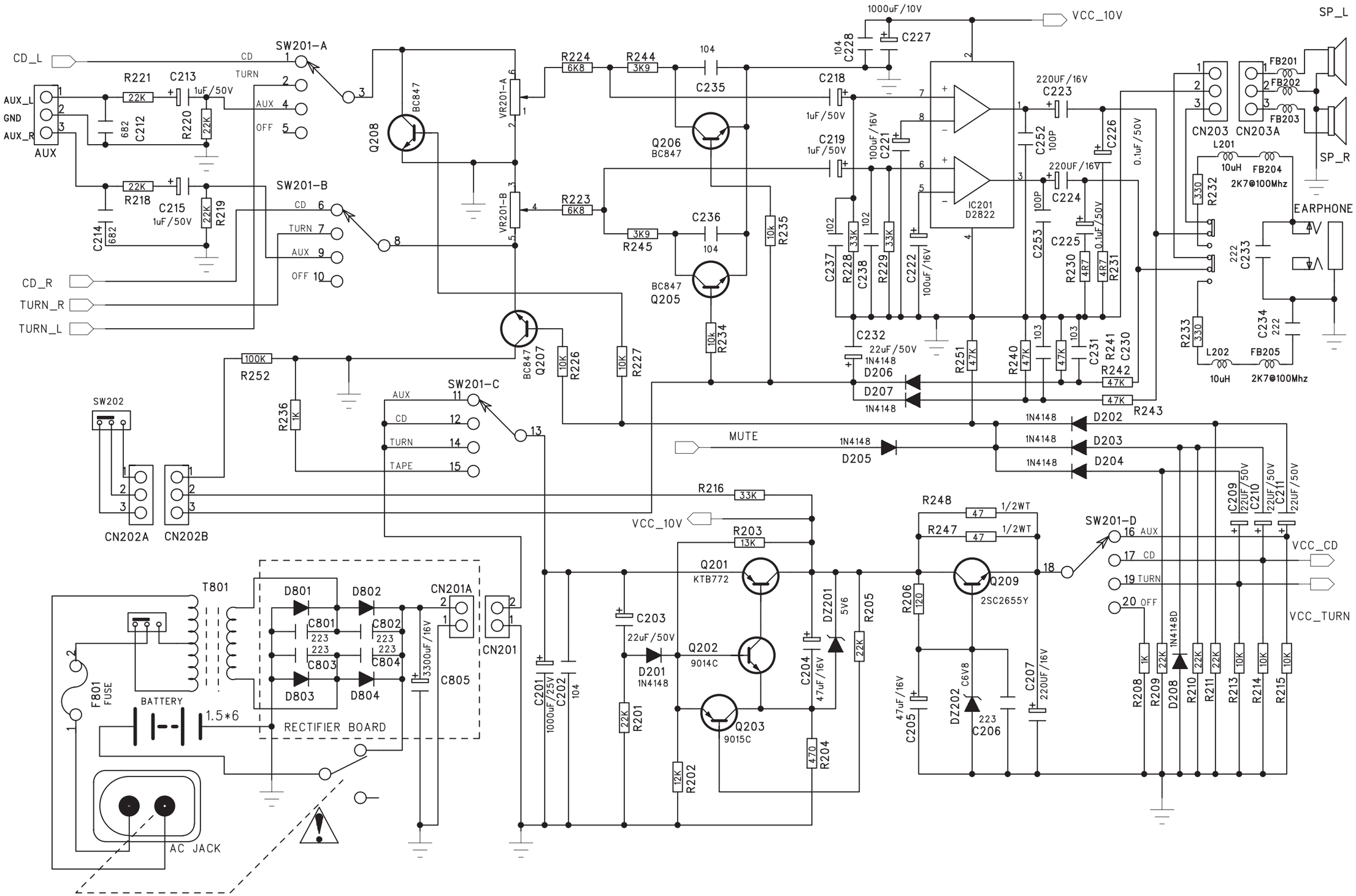

Downloaded Free from http://www.free-service-manuals.com

USB part

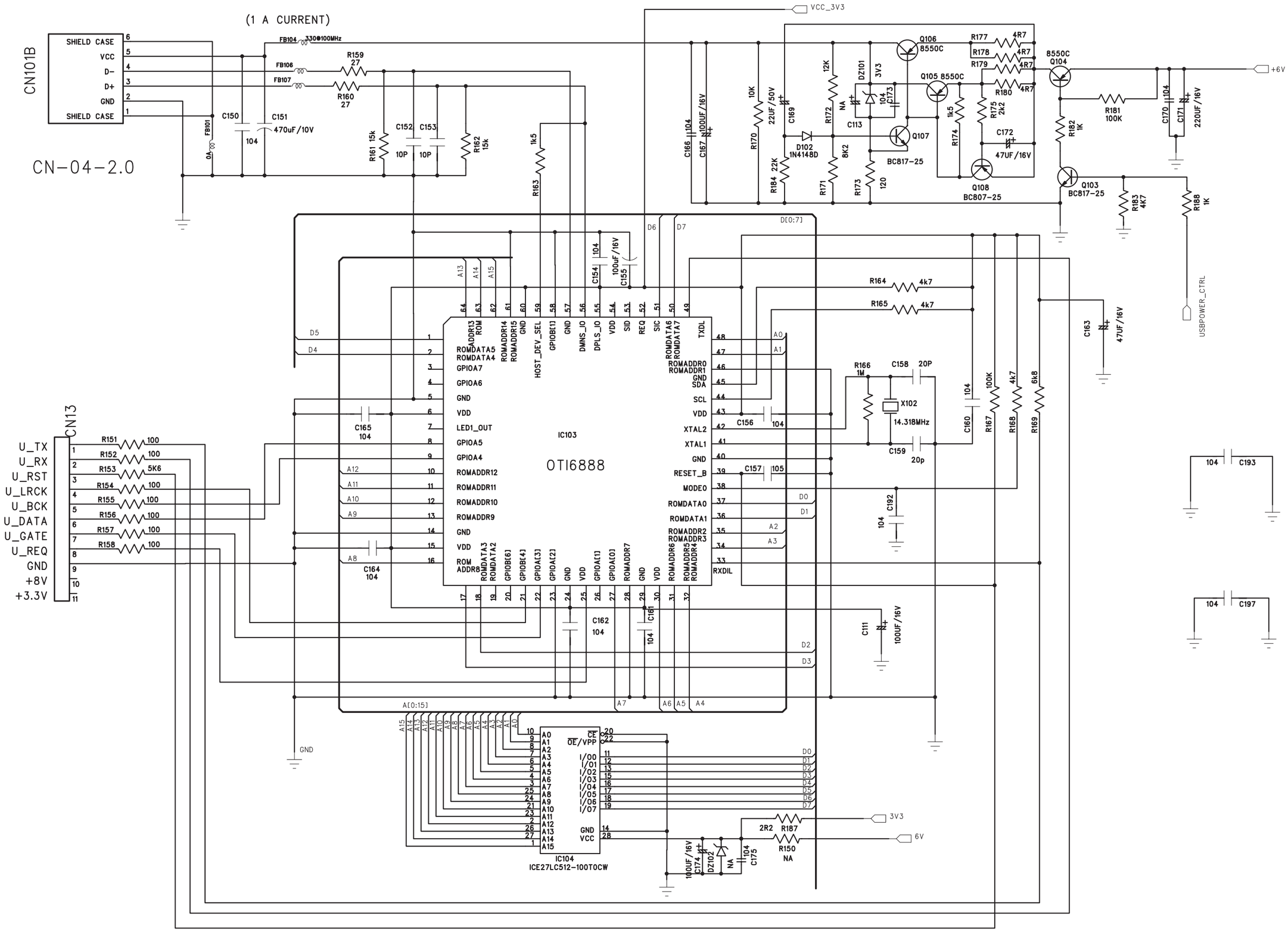

Downloaded Free from http://www.free-service-manuals.com

TUNER part

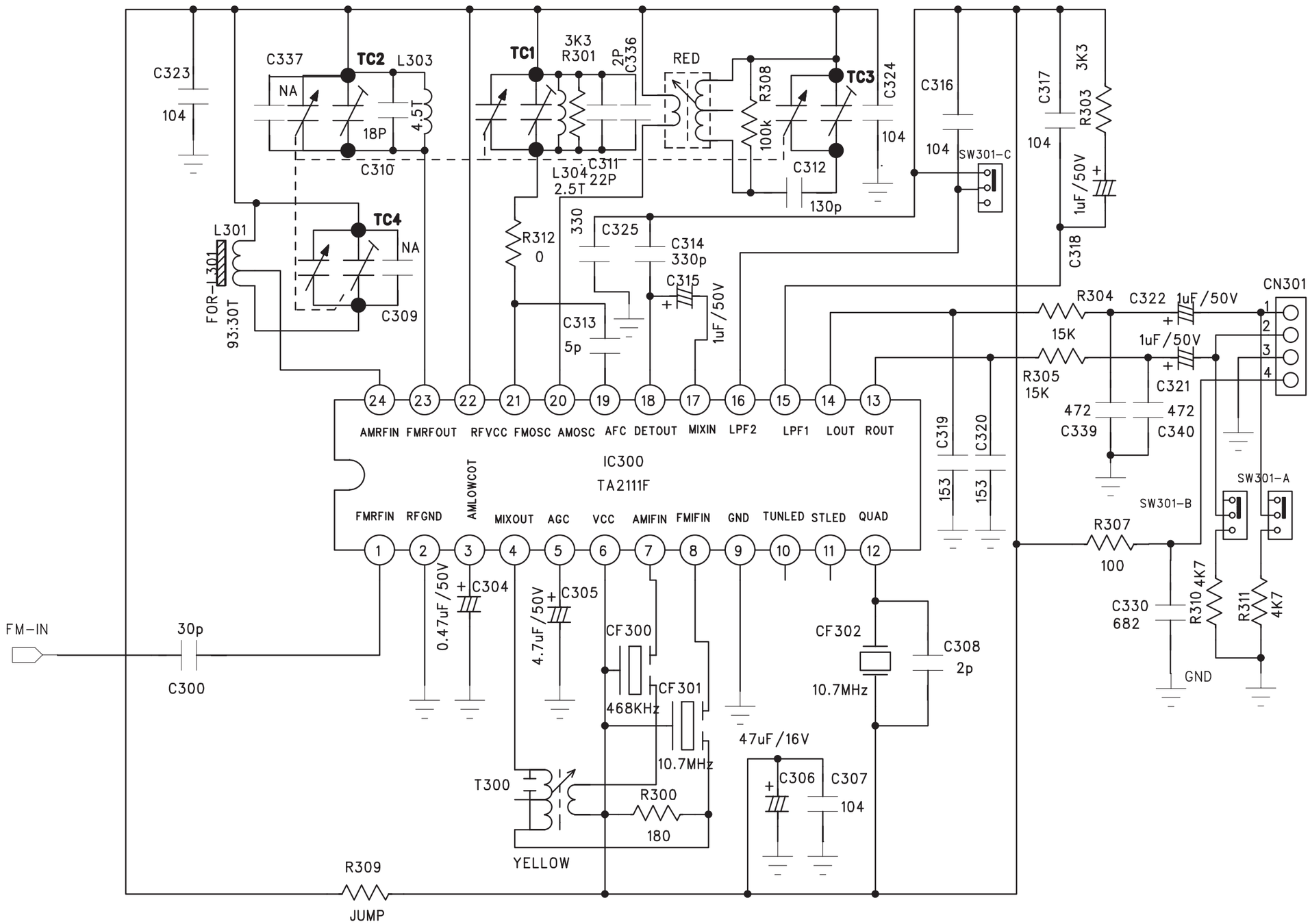

Downloaded Free from http://www.free-service-manuals.com

TUNER BUFFER part

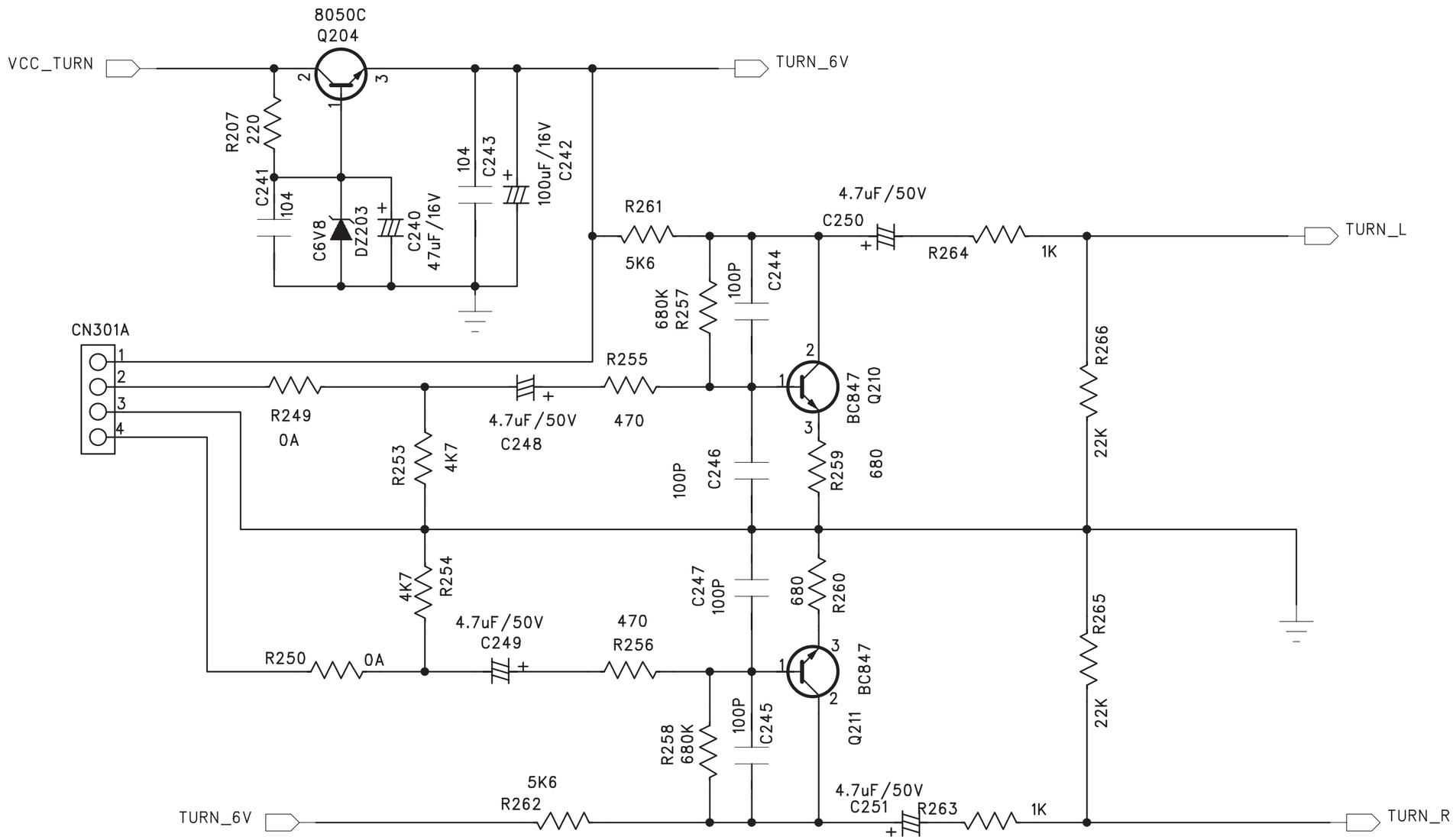

Downloaded Free from http://www.free-service-manuals.com

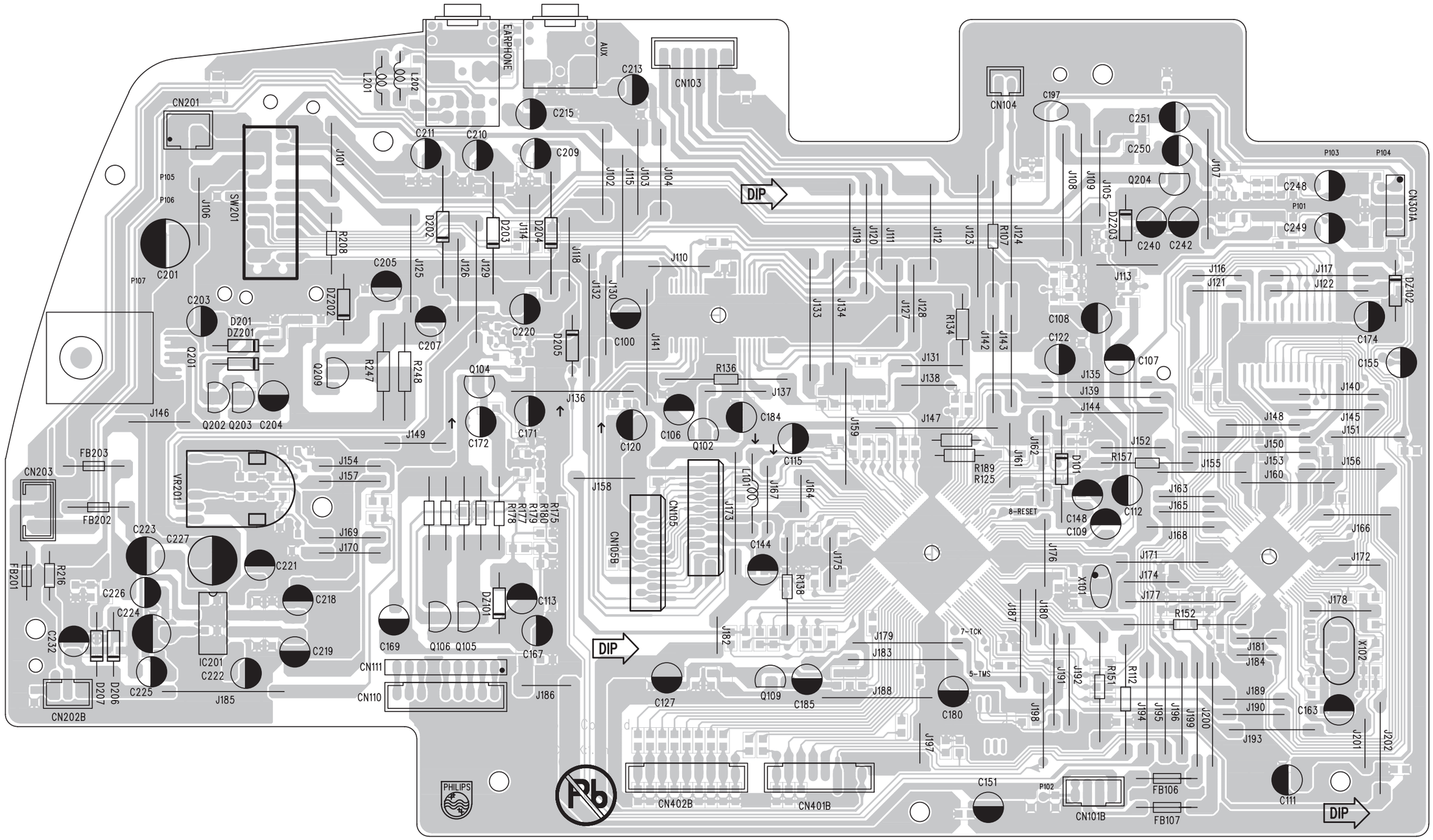

Downloaded Free from http://www.free-service-manuals.com

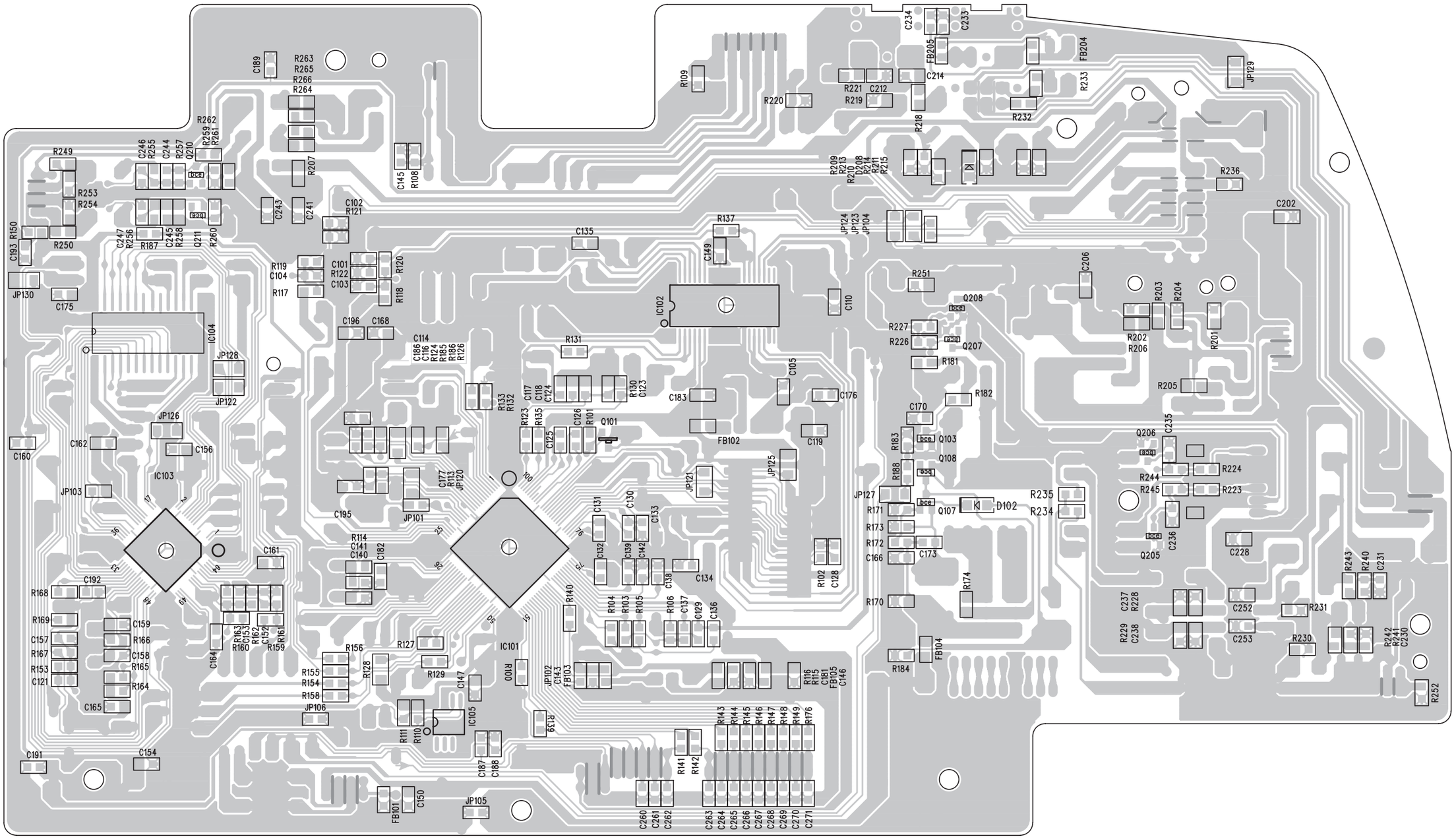

Downloaded Free from http://www.free-service-manuals.com

Service parts list

994000005114	CD DOOR SPRING SUS304 CD
996510000397	CD DAMPER PINK COLOR 658F
994000005115	CD DAMPER BLACK COLOR 658PH
994000005116	BATTERY DOOR
996510000928	CD DOOR GEAR HOLDER
996510000929	HANDLE
996510000930	CD DOOR
996510000931	CD DOOR GEAR
994000003392	CD MECHANISM DA11B3VF (SANYO)
994000002364	ROD ANTENNA 2 SECTIONS L:420MM
996510000932	77MM SPEAKER 8 OHM 1W 3INCH
996510000933	CD DOOR SWITCH 1P2T
994000005096	TRANSFOMER EI-41 230V 50Hz 120V 60Hz
996510000934	AC POWER CORD (for -55)
996500042089	5 FEET VDE AC POWER CORD (for -/79)
996510000935	2 PINS PLUG ADAPTOR

Note: Only these parts mentioned in the list are normal service parts.

Downloaded Free from http://www.free-service-manuals.com